Material: Messing - Brass
5mm Bohrungen senkrecht zur Schräge bohren.
Drill Holes perpendicular to the pitch.

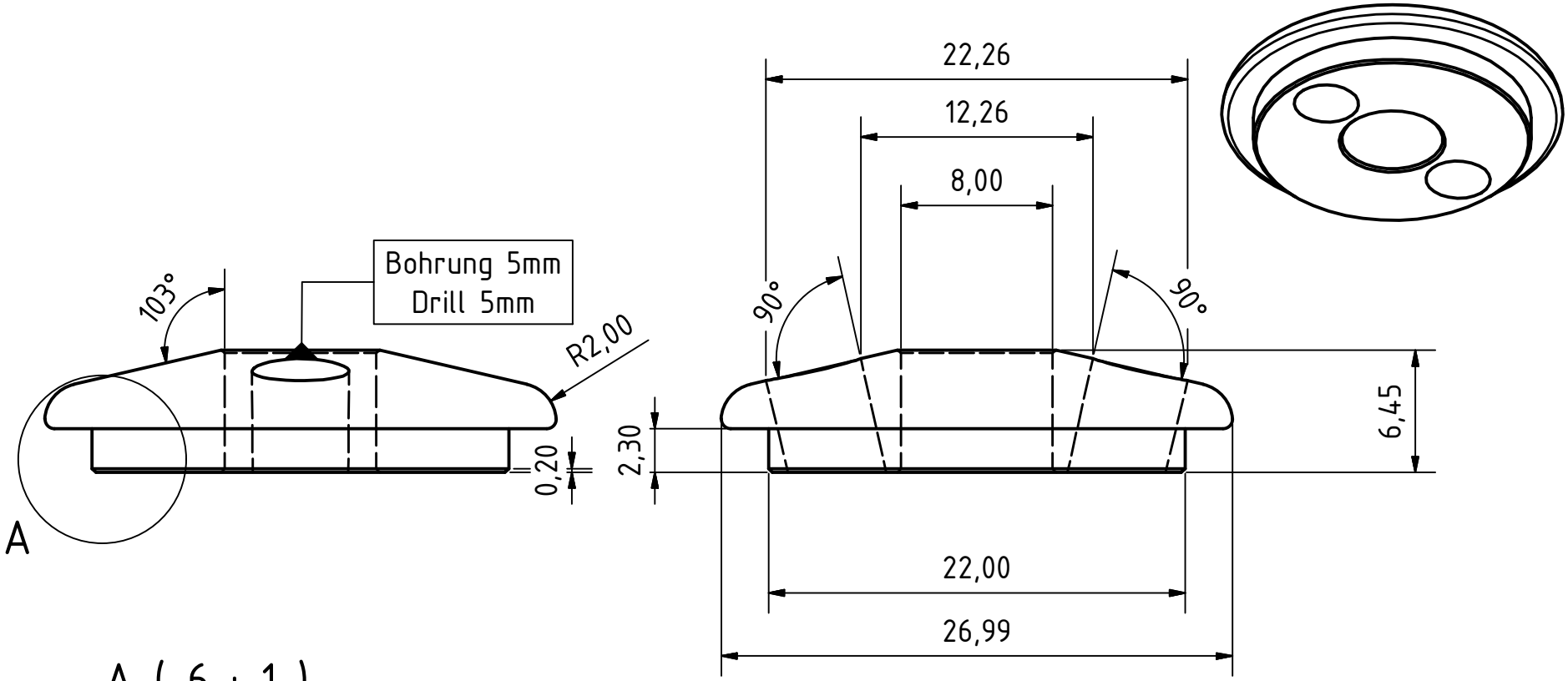

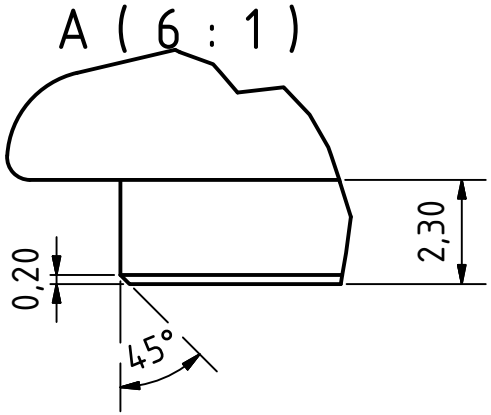

					Date	Name
				Drawn	24.02.2017	Stefan
				Checked		
				Standard		
State	Changes	Date	Name			

Deckel - Lid

Deckel

1

A4