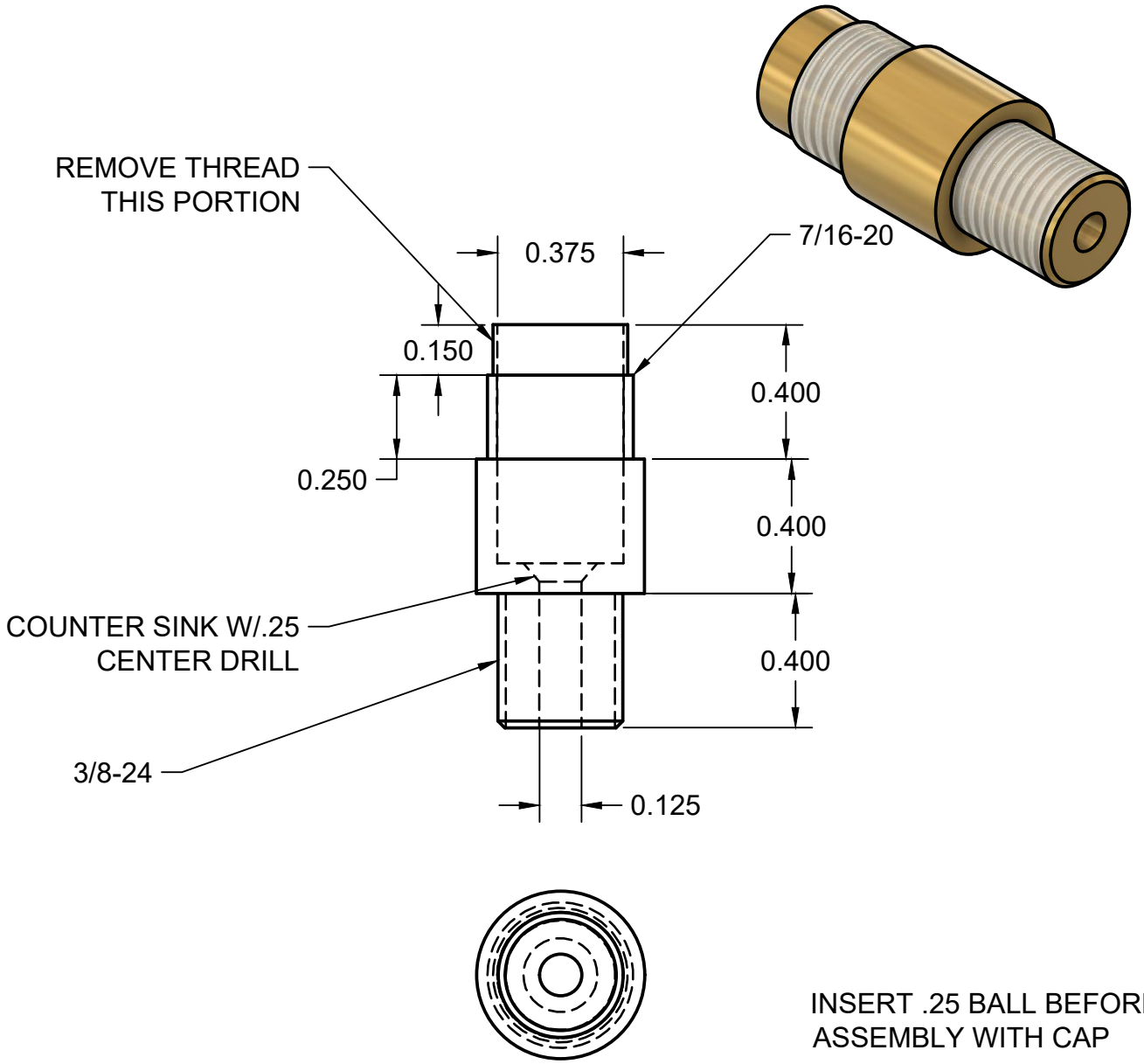

INSERT .25 BALL BEFORE
ASSEMBLY WITH CAP

BRASS	PROJECT Overhead Cam				
	TITLE Crankcase Vent Base				
APPROVED	SIZE	CODE	DWG NO		REV
CHECKED	A				
DRAWN Hogan Liechty 8/20/2017	SCALE 2:1	WEIGHT		SHEET 1/1	