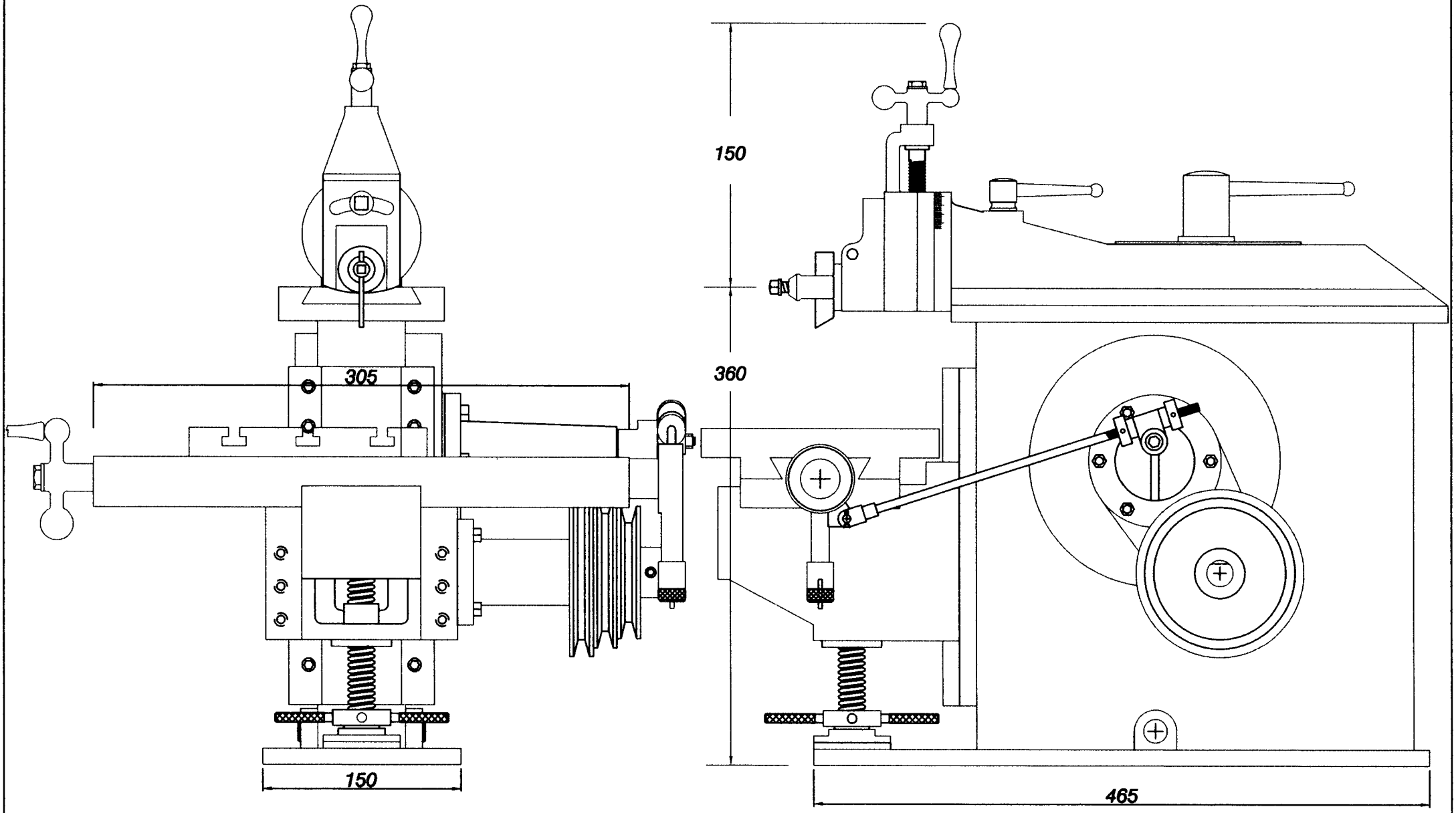
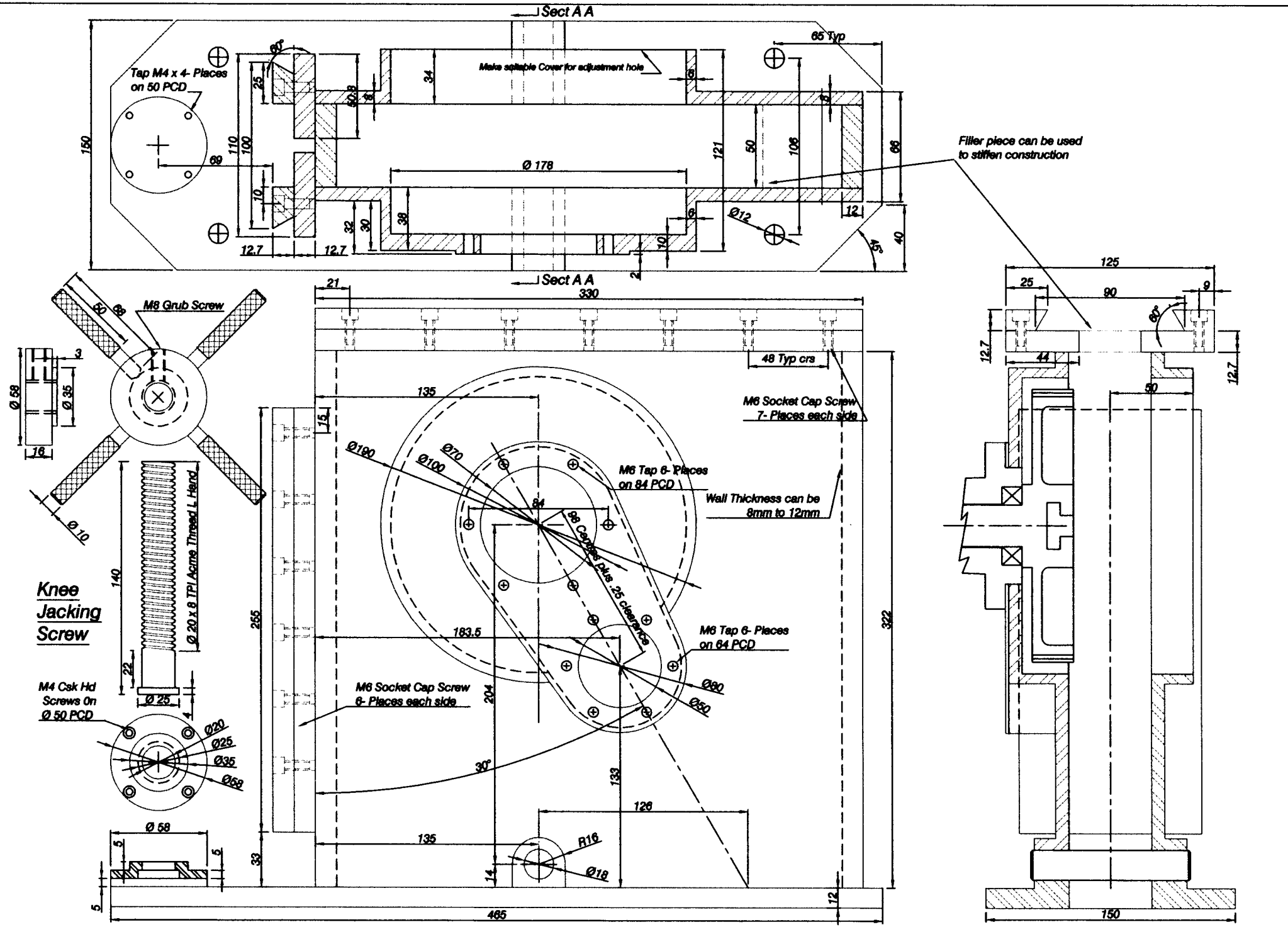
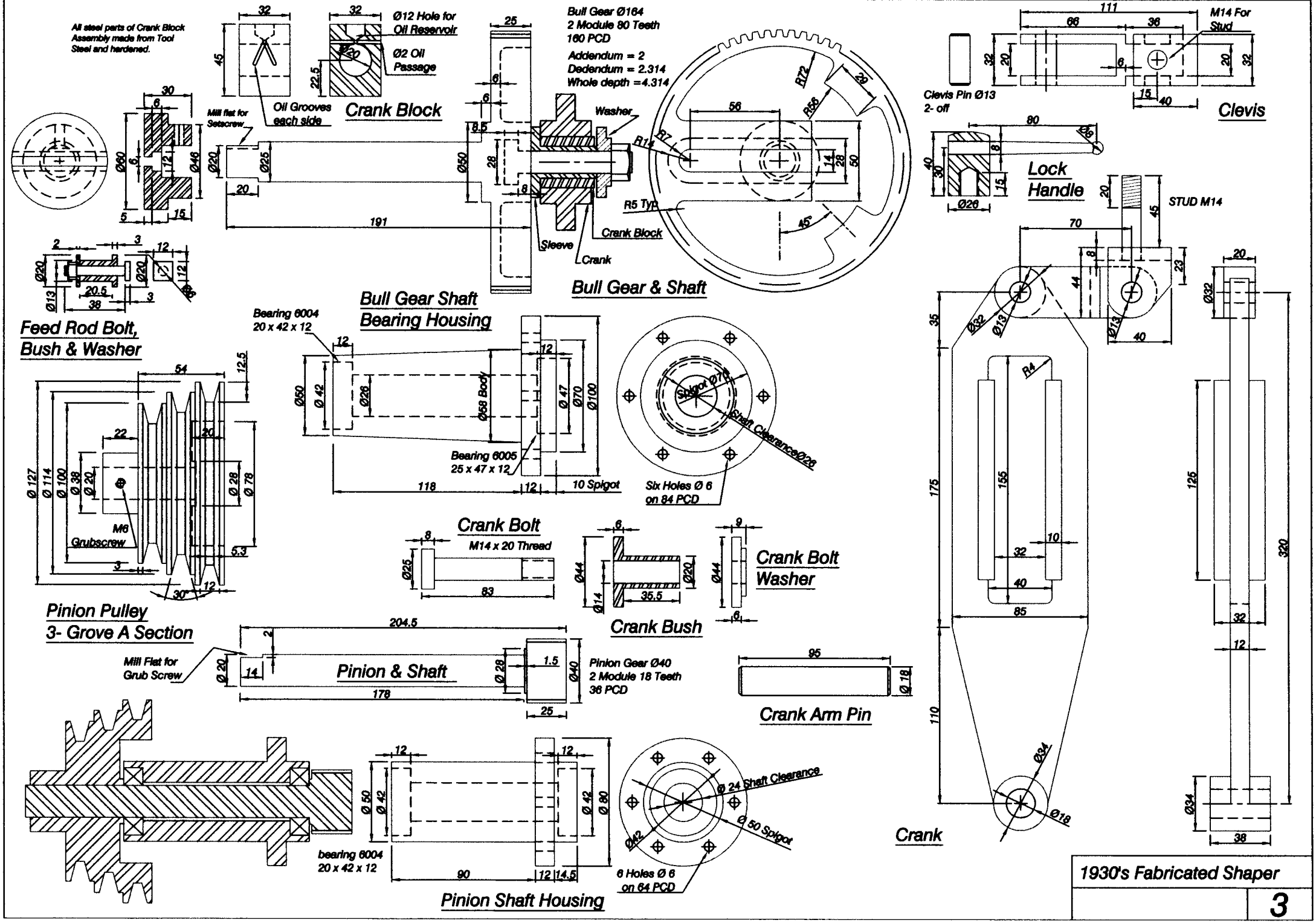



| 1930's Fabricated Shaper | |
|---|---|
| GEN ASSY | 1 |

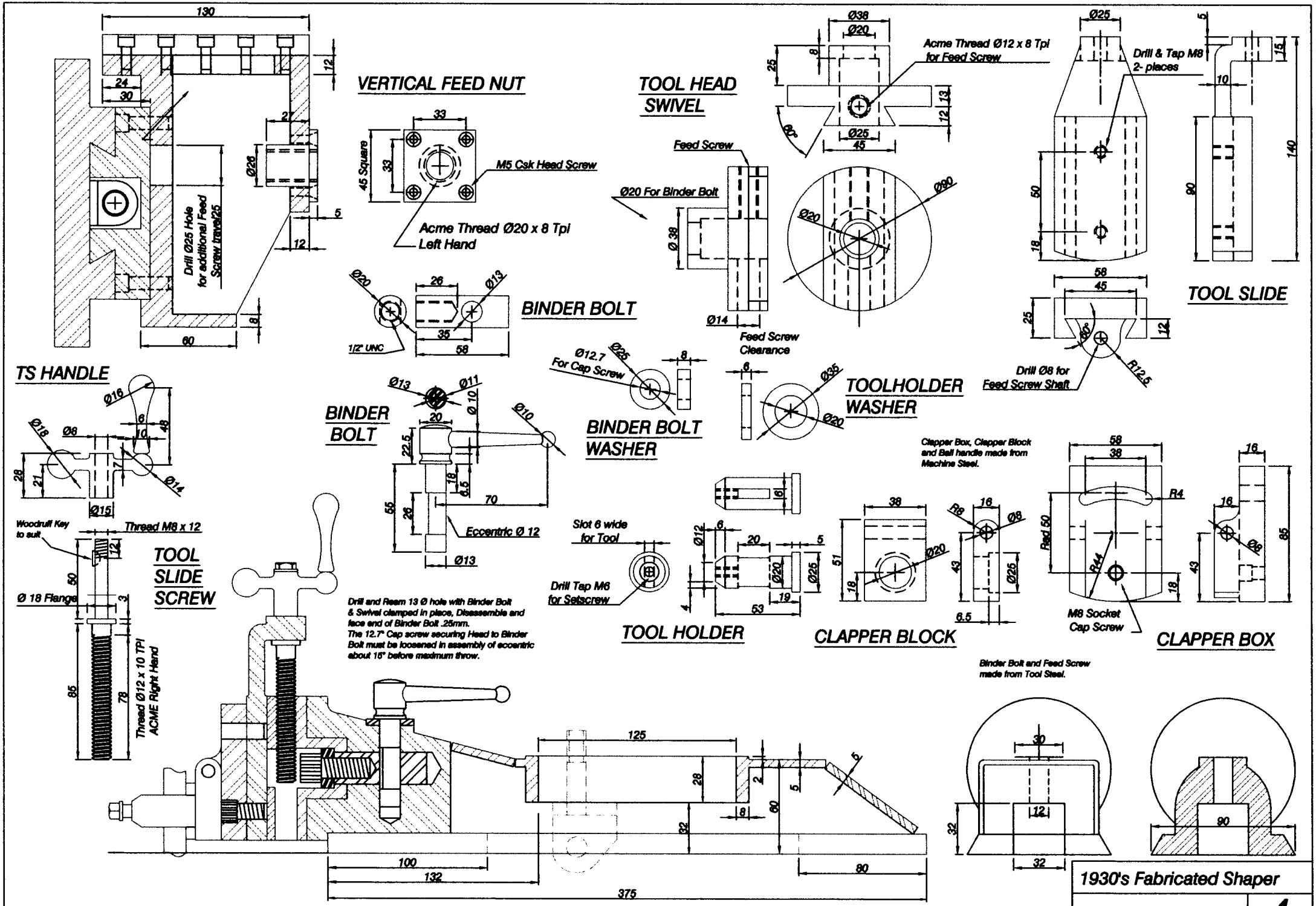

Sect A A
Tap M4 x 4- Places on 50 PCD
Make suitable Cover for adjustment hole
65 Typ
Filler piece can be used to stiffen construction
Ø 178
Ø12
M8 Grub Screw
Sect A A
48 Typ crs
M6 Socket Cap Screw 7- Places each side
M6 Tap 6- Places on 84 PCD
Wall Thickness can be 8mm to 12mm
98 Centres plus 25 clearance
M6 Tap 6- Places on 64 PCD
M6 Socket Cap Screw 6- Places each side
Knee Jacking Screw
Ø 20 x 8 TPI Acme Thread L Hand
M4 Csk Hd Screws On Ø 50 PCD
R16
Ø18
30°
465
330
322
255
150
1930's Fabricated Shaper
Main Body
2

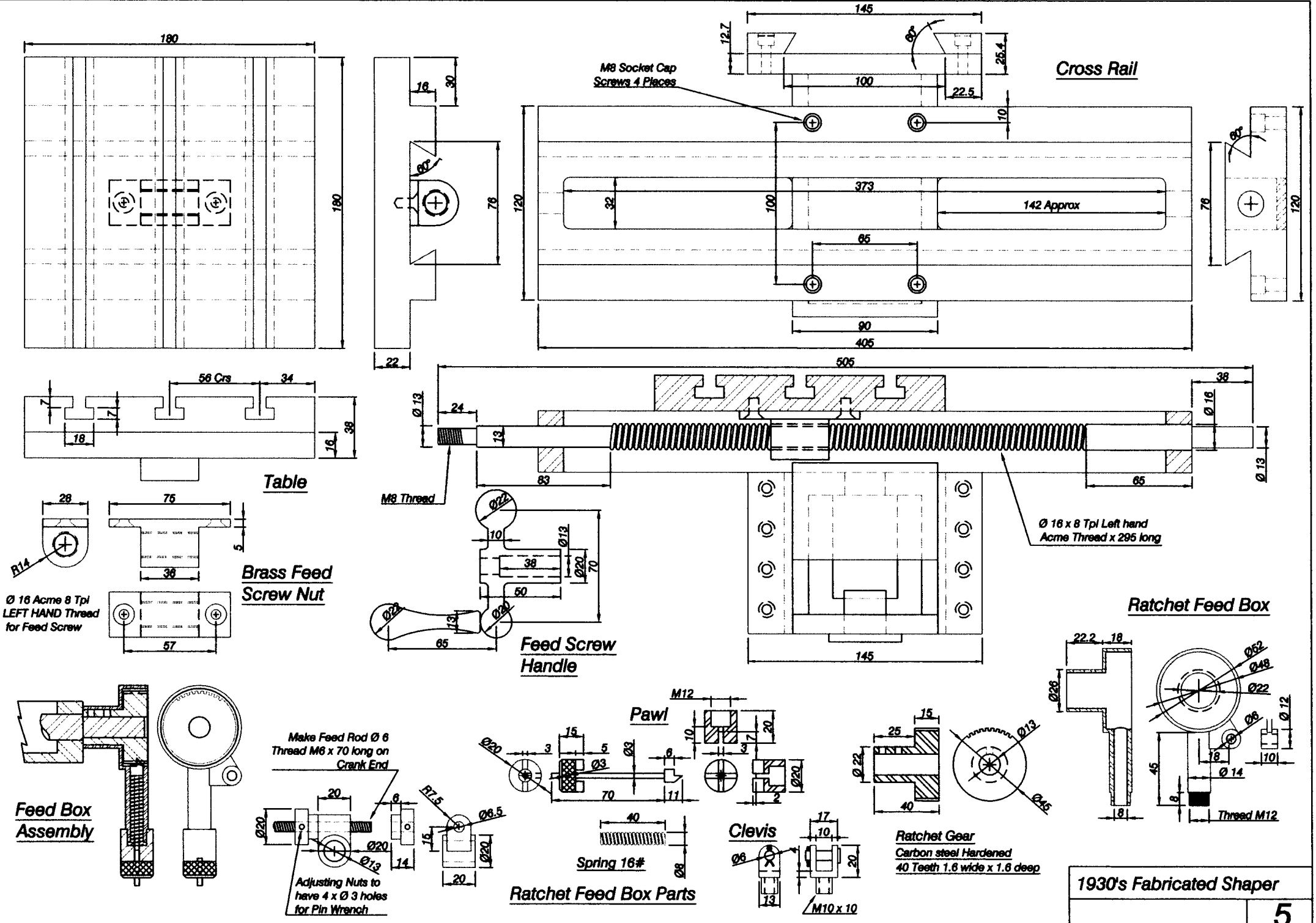
All steel parts of Crank Block Assembly made from Tool Steel and hardened.




1930's Fabricated Shaper

3


VERTICAL FEED NUT
Drill Ø25 Hole for additional Feed Screw travel25
Acme Thread Ø20 x 8 Tpi Left Hand
M5 Csk Head Screw
45 Square
TOOL HEAD SWIVEL
Acme Thread Ø12 x 8 Tpi for Feed Screw
Drill & Tap M8 2- places
TOOL SLIDE
Feed Screw
Ø20 For Binder Bolt
Feed Screw Clearance
BINDER BOLT
1/2" UNC
TS HANDLE
BINDER BOLT
BINDER BOLT WASHER
Ø12.7 For Cap Screw
TOOLHOLDER WASHER
Drill Ø8 for Feed Screw Shaft
Clapper Box, Clapper Block and Ball handle made from Machine Steel.
Woodruff Key to suit
Thread M8 x 12
TOOL SLIDE SCREW
Ø 18 Flange
Thread Ø12 x 10 TPI ACME Right Hand
Eccentric Ø 12
Slot 6 wide for Tool
Drill Tap M6 for Setscrew
TOOL HOLDER
CLAPPER BLOCK
CLAPPER BOX
M8 Socket Cap Screw
Drill and Ream 13 Ø hole with Binder Bolt & Swivel clamped in place, Disassemble and face end of Binder Bolt .25mm.
The 12.7" Cap screw securing Head to Binder Bolt must be loosened in assembly of eccentric about 15° before maximum throw.
Binder Bolt and Feed Screw made from Tool Steel.
1930's Fabricated Shaper
4


180
180
16
30
60°
76
120
145
12.7
60°
25.4
100
22.5
M8 Socket Cap
Screws 4 Places
10
373
32
100
142 Approx
65
90
405
Cross Rail
78
120
22
505
38
Ø 13
24
13
Ø 16
Ø 13
83
65
M8 Thread
Ø 16 x 8 Tpi Left hand
Acme Thread x 295 long
145
56 Crs
34
7
7
18
16
38
Table
28
75
5
R14
36
Ø 16 Acme 8 Tpi
LEFT HAND Thread
for Feed Screw
57
Brass Feed
Screw Nut
Ø22
10
Ø13
38
Ø20
70
50
Ø22
13
Ø20
65
Feed Screw
Handle
Ratchet Feed Box
22.2
18
Ø26
Ø52
Ø48
Ø22
Ø6
Ø 12
18
10
45
Ø 14
8
8
Thread M12
Feed Box
Assembly
Make Feed Rod Ø 6
Thread M6 x 70 long on
Crank End
20
6
R7.5
Ø6.5
Ø20
Ø20
Ø13
14
15
Ø20
20
Adjusting Nuts to
have 4 x Ø 3 holes
for Pin Wrench
M12
Pawl
15
Ø20
3
5
Ø3
Ø3
6
10
3
7
20
70
11
2
Ø20
40
Spring 16#
Ø8
Ratchet Feed Box Parts
Clevis
17
10
Ø6
20
13
M10 x 10
15
25
Ø 22
40
Ø13
Ø45
Ratchet Gear
Carbon steel Hardened
40 Teeth 1.6 wide x 1.6 deep
1930's Fabricated Shaper
5